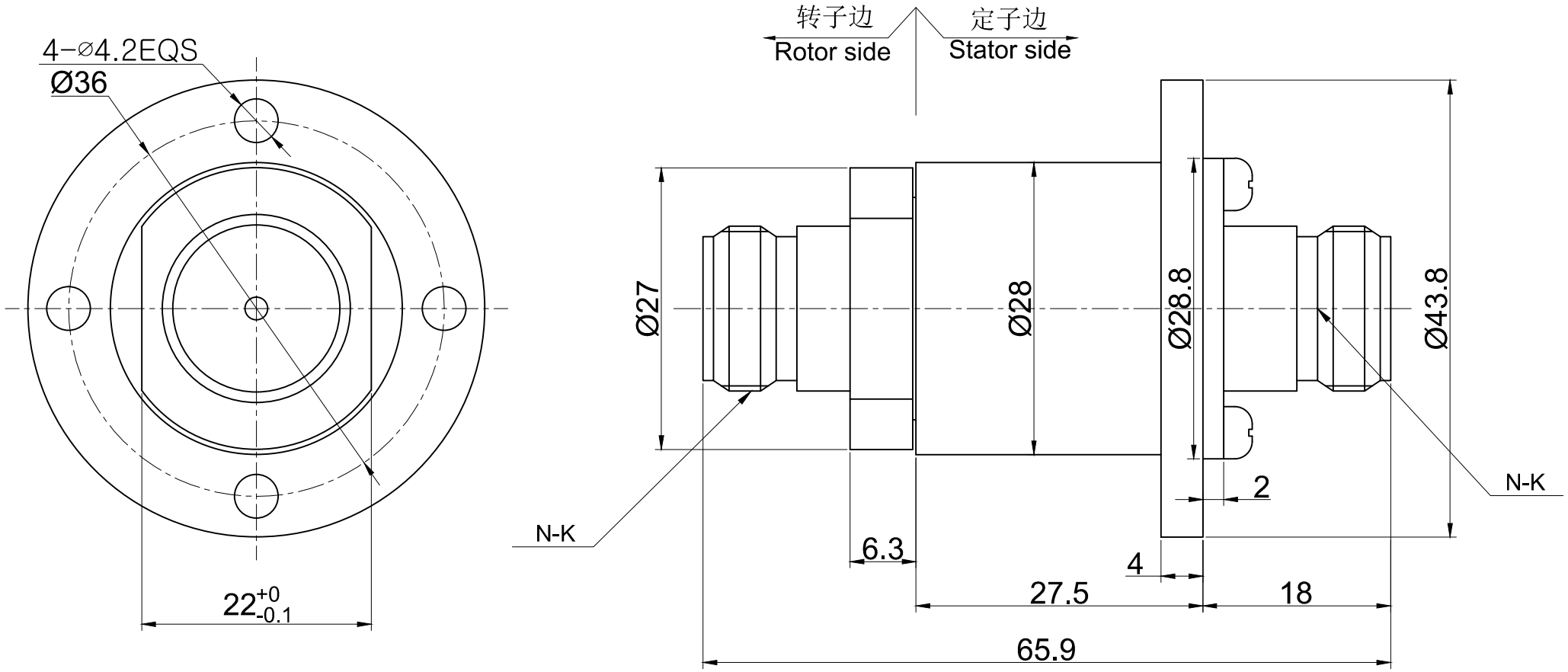
4-⌀4.2EQS
Ø36
22+0 -0.1
转子边
Rotor side
定子边
Stator side
Ø27
Ø28
Ø28.8
Ø43.8
N-K
N-K
6.3
2
4
27.5
18
65.9